Amplifier

https://xtronic.org/circuit/amplifier/power-audio-amplifier-tda2002/

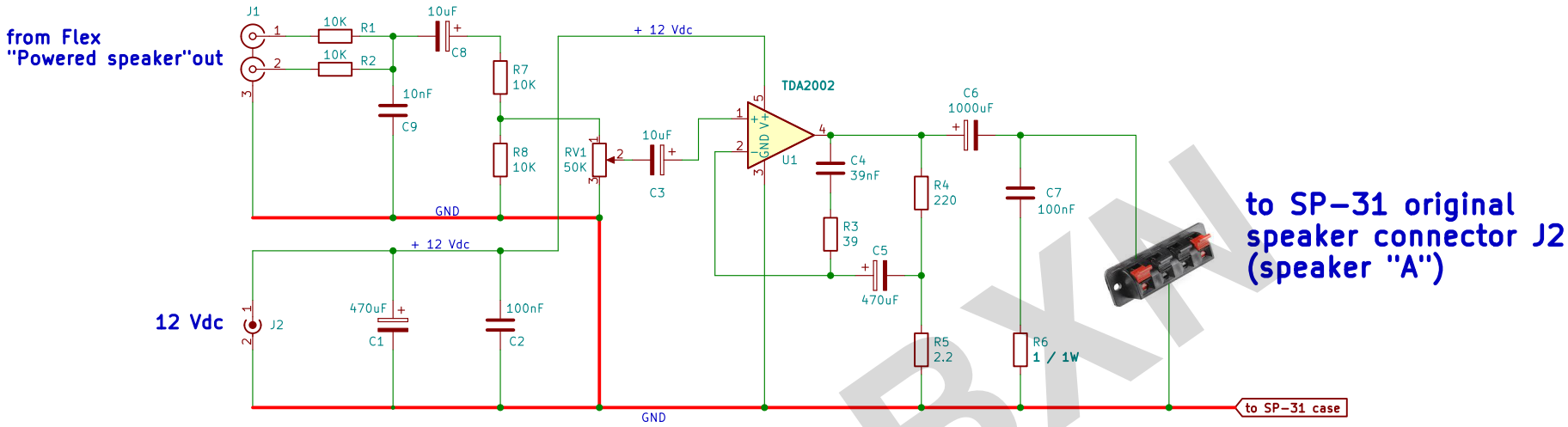

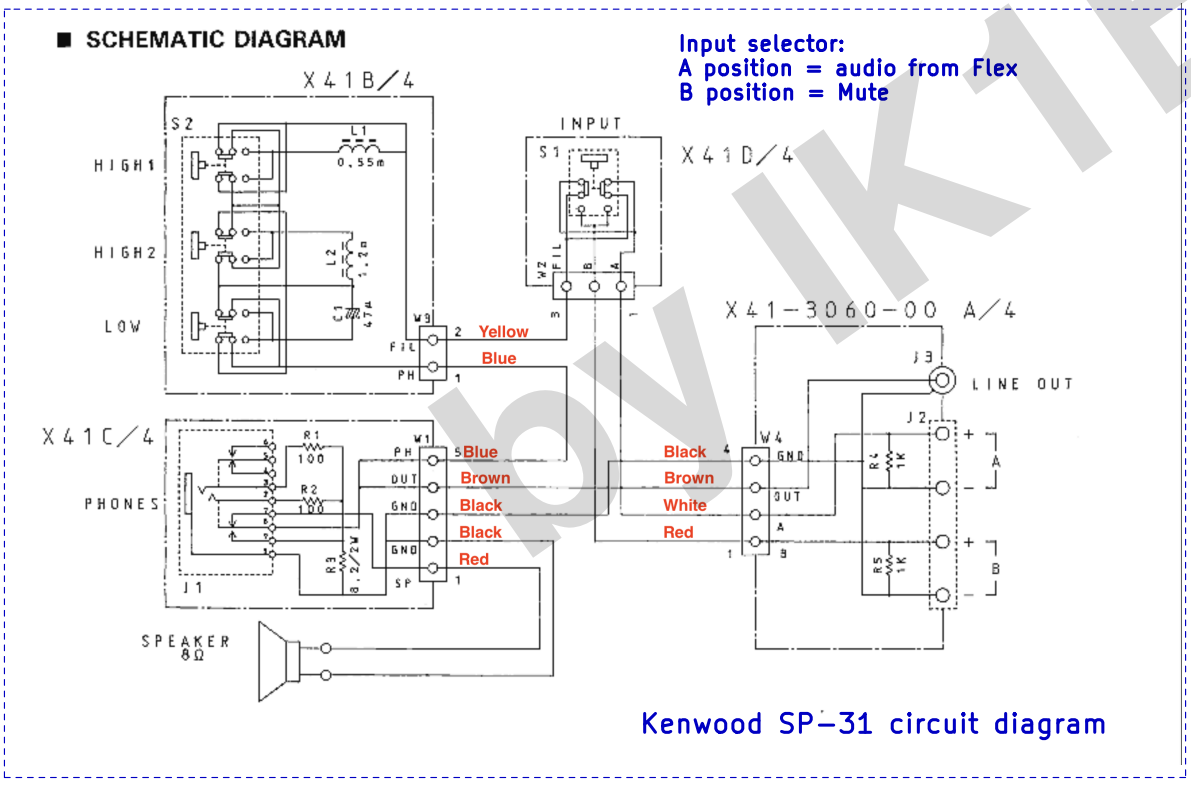

Kenwood SP-31 circuit diagram

TDA2002/2003

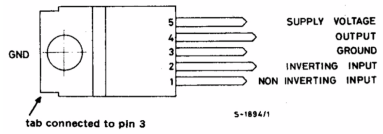

https://www.st.com/resource/en/datasheet/dm00028077.pdf

by IK1BXN

IK1BXN		
Sheet: /		
File: Kenwood SP-31 as Flex external speaker .kicad_sch		
Title: Kenwood SP-31 as Flex external speaker		
Size: A4	Date: 2022-09-16	Rev: 4
KiCad E.D.A. kicad (6.0.1-0)		Id: 1/1