http://www.zen22142.zen.co.uk/Circuits/Audio/dyn_mic/dyn_mic.htm

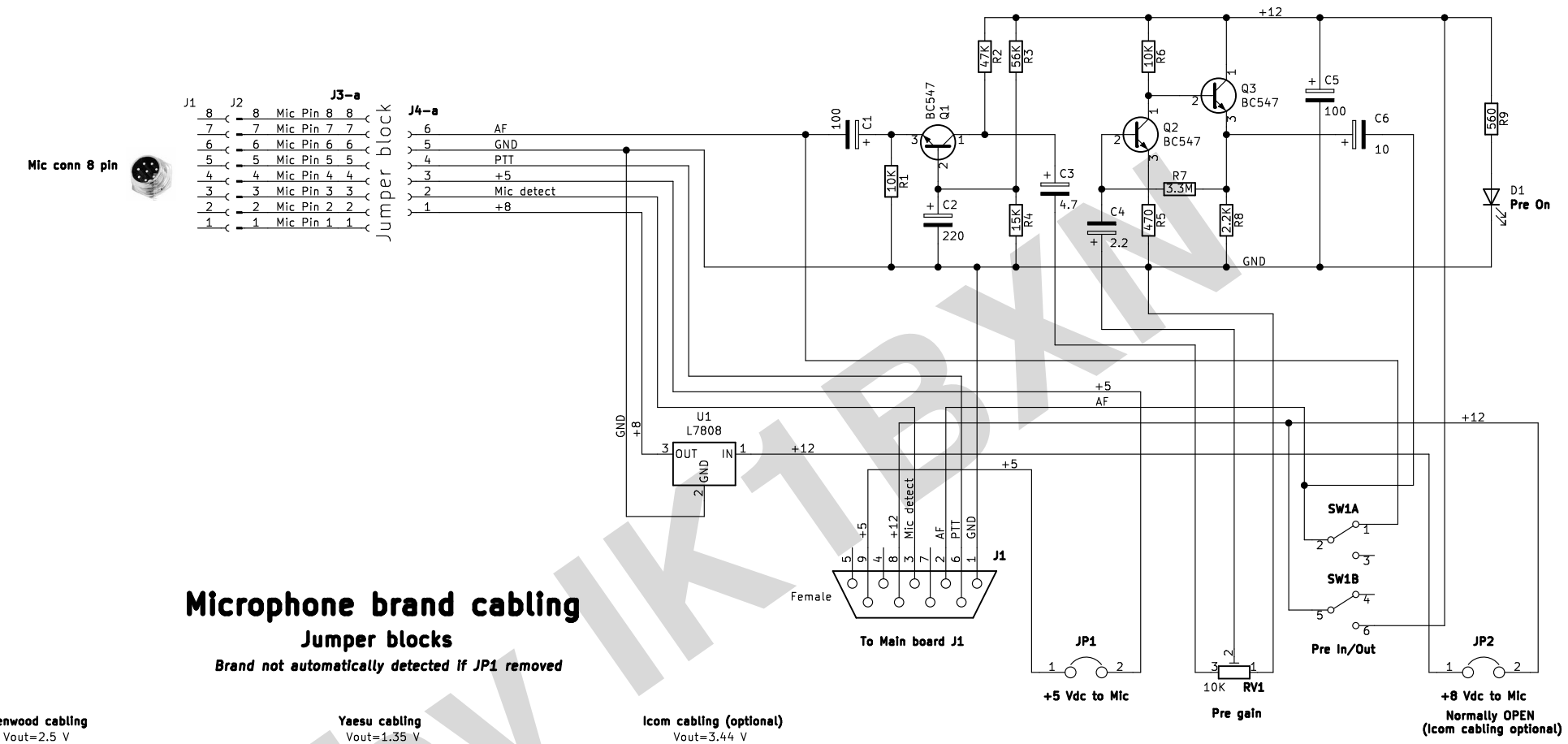

Microphone brand cabling

Jumper blocks

Brand not automatically detected if JP1 removed

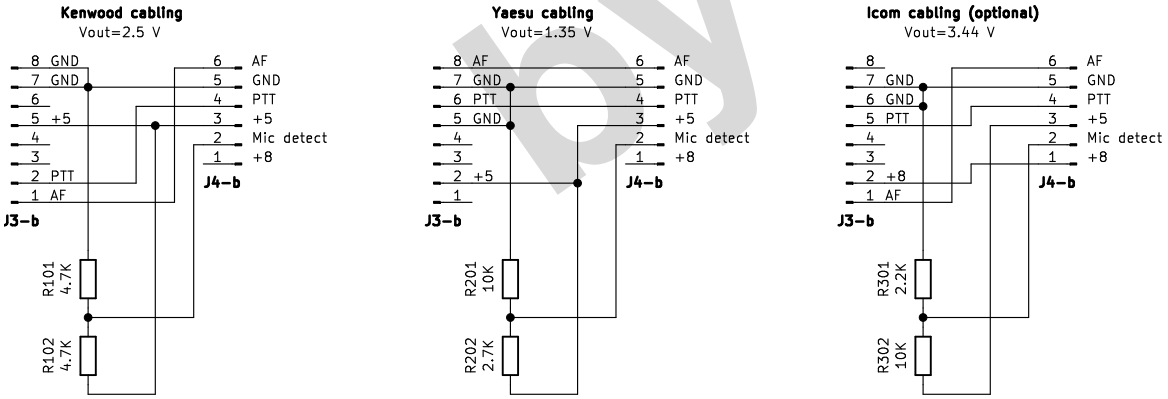

by IK1BXN

Sheet: /
File: Mic adapter.sch

Title: Microphone switch v2-Mic adapter

Size: A4	Date: 2018-11-16	**Rev: 1.05**
KiCad E.D.A. eeschema (5.1.6-0-10_14)		Id: 1/1